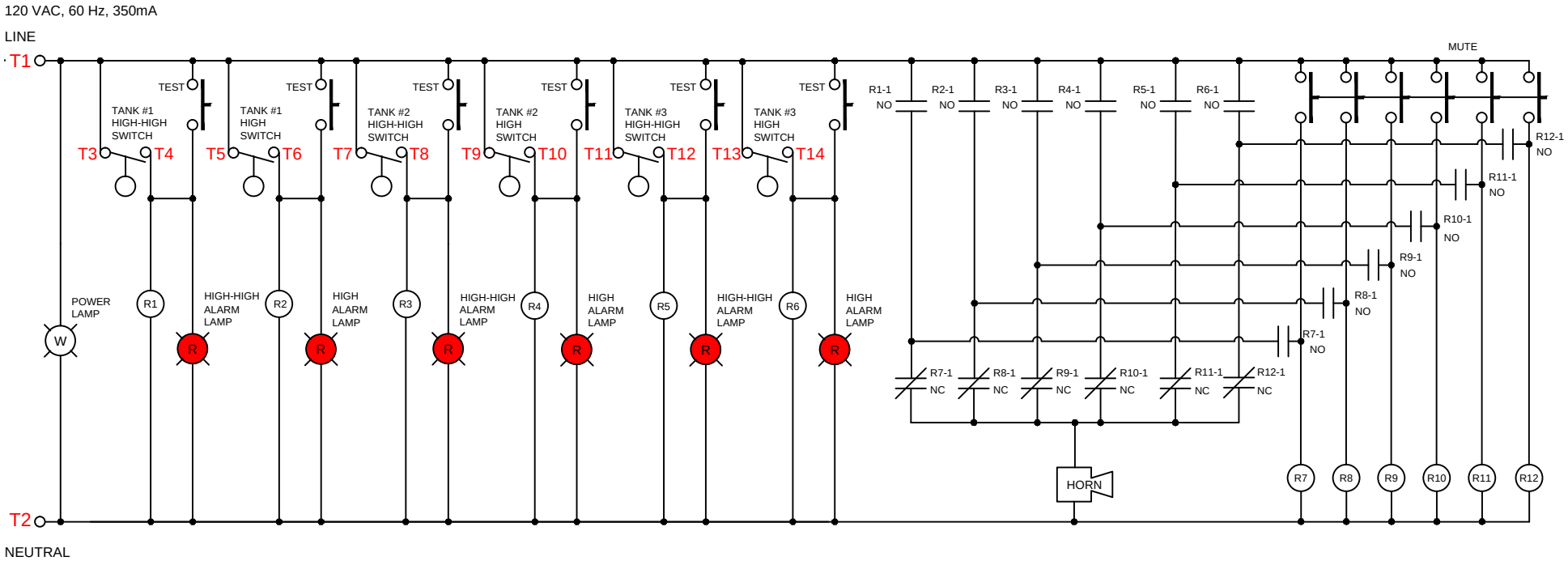

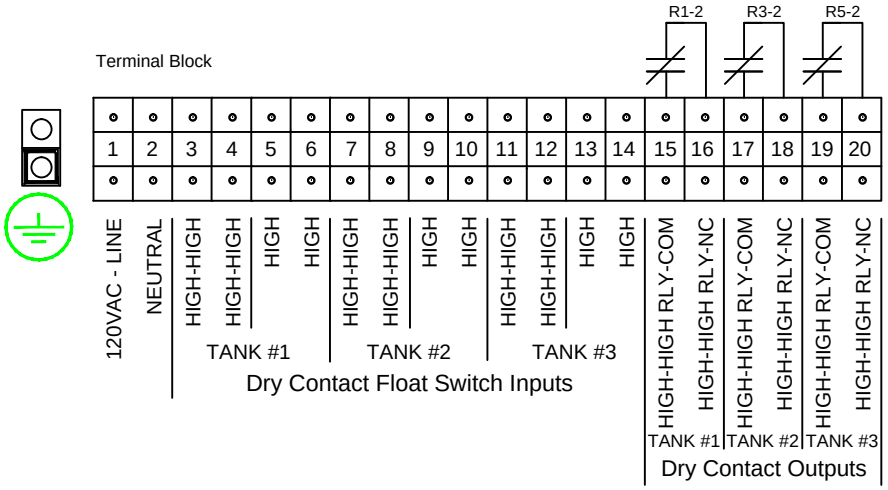

KTECH INDUSTRIAL PRODUCTS INC.	
Drawing:	Weatherproof 3 Tank Alarm - High-High & High c/w Mute, Test, Auto Reset & Relay Outputs
Dwg. No.	AL201-6-3TK-3R-HHH Schematic
Date: Mar 26, 2020	Job: