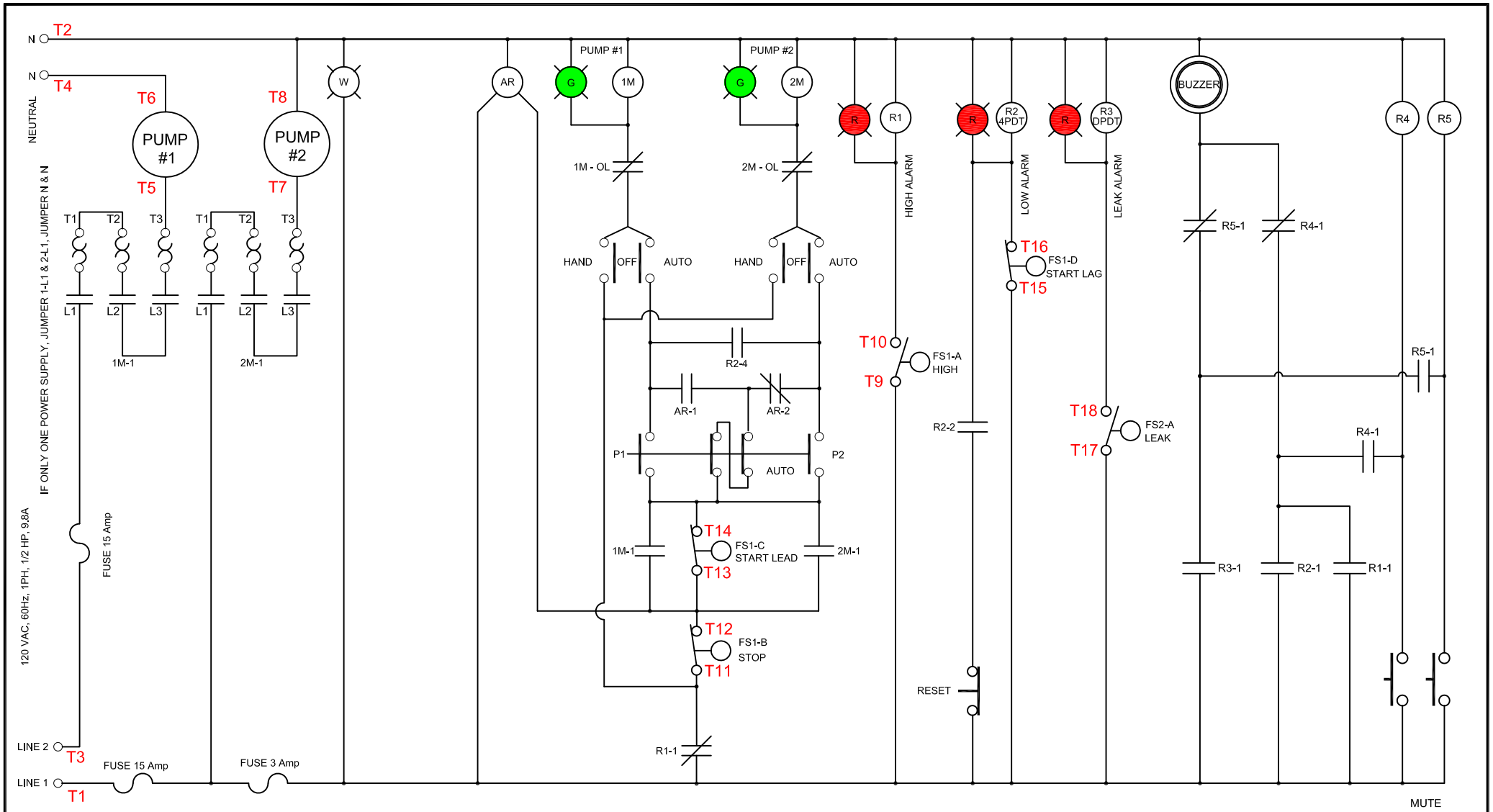

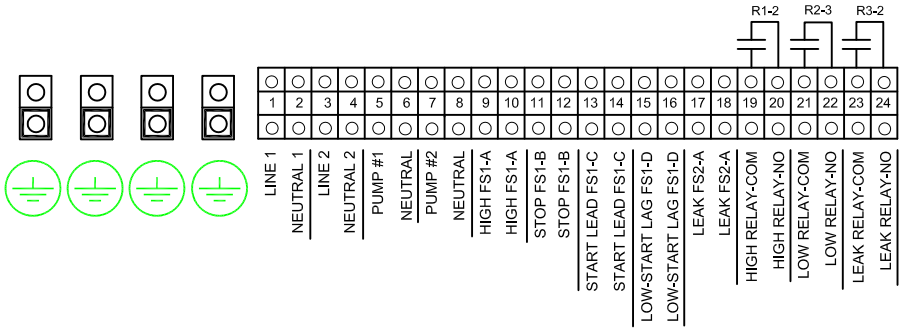

KTECH INDUSTRIAL PRODUCTS INC.	
Drawing:	Duplex Pump Control, High, Low & Leak c/w Mute, Reset and Relay Outputs
Dwg. No.	PC1103A-HLLK-3R Schem
Date: Sept 21, 2017	Job:

Pump Up