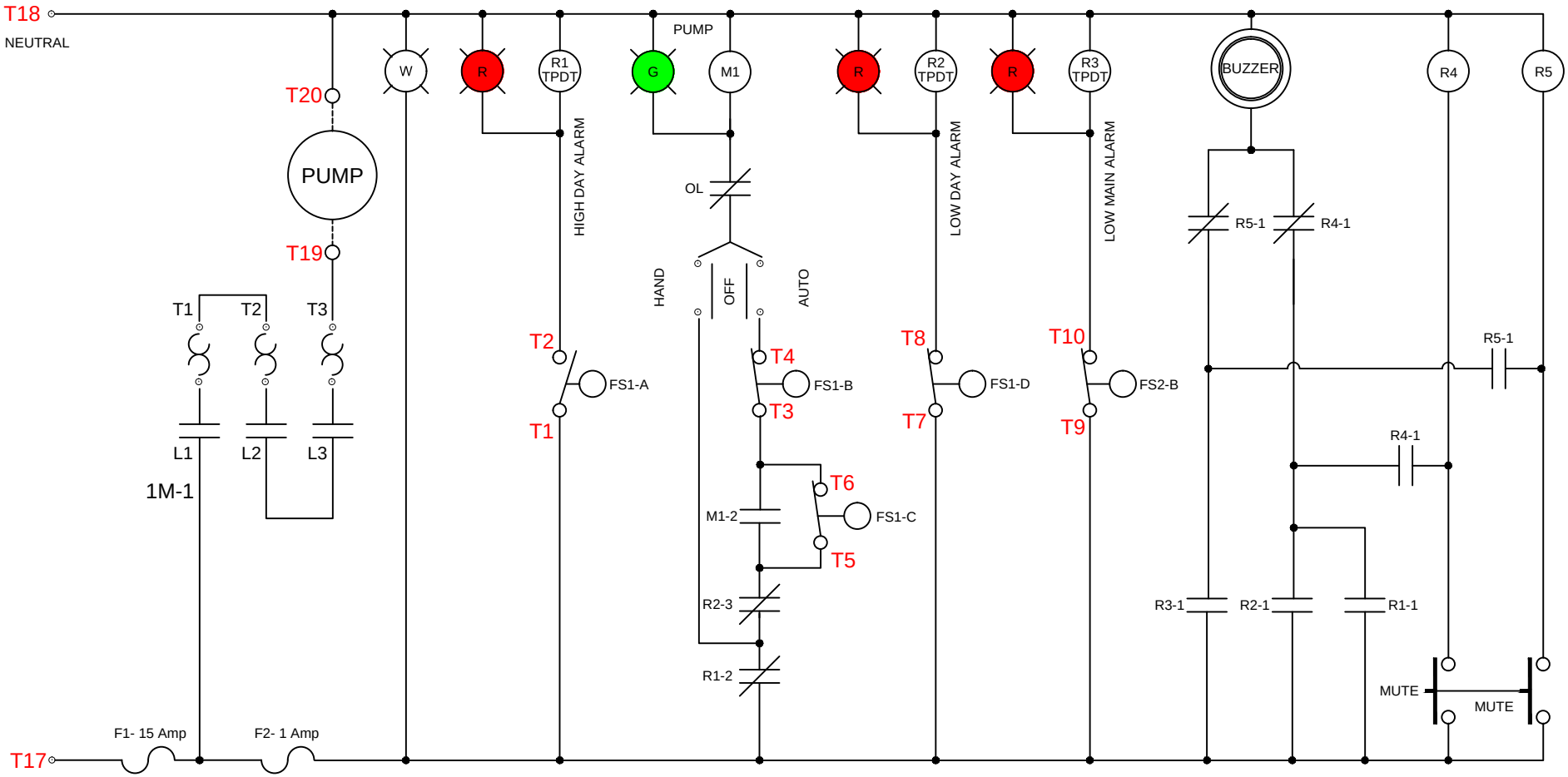

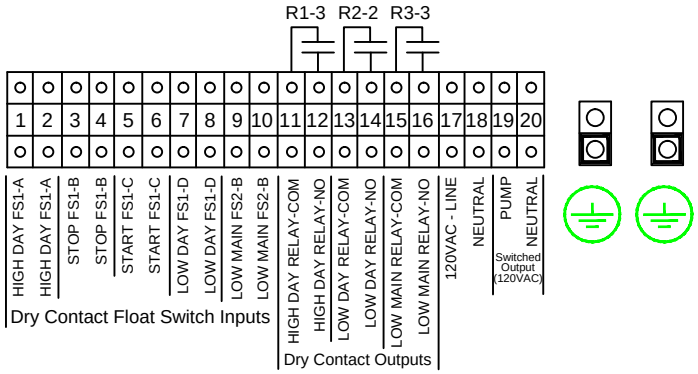

Pump Up

KTECH INDUSTRIAL PRODUCTS INC.	
Drawing: Pump Control & High/Low Level Day & Low Main c/w Mute, Auto Reset & 3 Relay Outputs	
Dwg. No. PC1104-3R-HLL Schem	
Date: Sept 26, 2022	Job: